Nemo 2 Duo
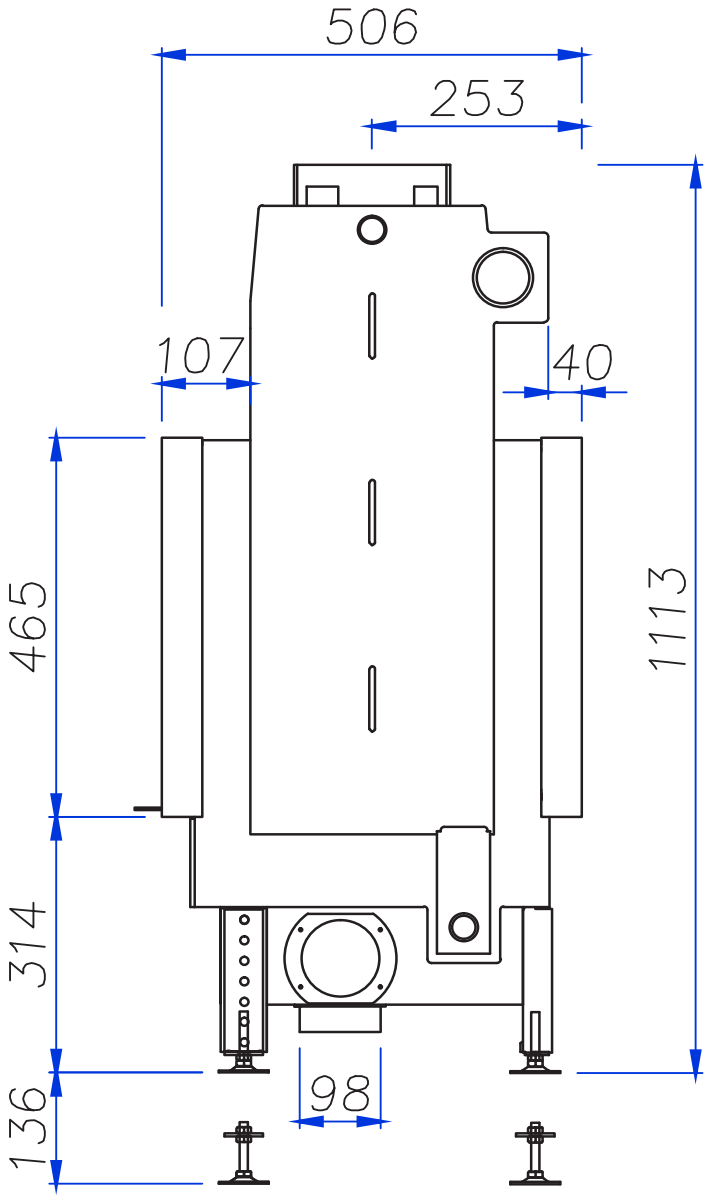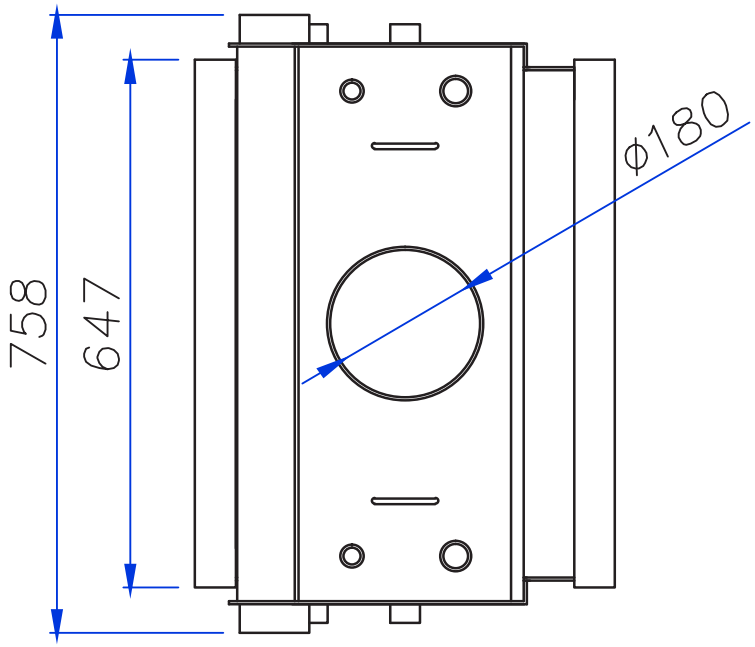
MODERN | OPTIMA | RASTER